Minimal computational models for characterization of heart valve interventions: preliminary evaluation of model personalization process

Krzysztof Czechowicz[1] and D. Rod Hose[1,2]

[1] Mathematical Modelling in Medicine Group, Dept. of Infection, Immunity and Cardiovascular Disease, The University of Sheffield, UK
[2] Insigneo Institute for in silico Medicine, Sheffield, UK

This work is supported by the EU project EurValve *Personalised Decision Support for Heart Valve Disease* H2020 PHC-30-2015 689617. This research was supported in part by the PL-Grid infrastructure.

Heart valve disease

- Heart Valve disease affects 2.5% of the population
- Over 70 000 valve interventions are carried out each year
- 2 main types of valve disease
  - Stenosis
    - Valve does not open completely (causes: Calcification, Rheumatic fever)
    - Higher resistance of the valve
  - Insufficiency
    - Valve does not close completely (causes: infections, trauma, Rheumatic fever, often idiopathic)

Modelling of heart valve disease

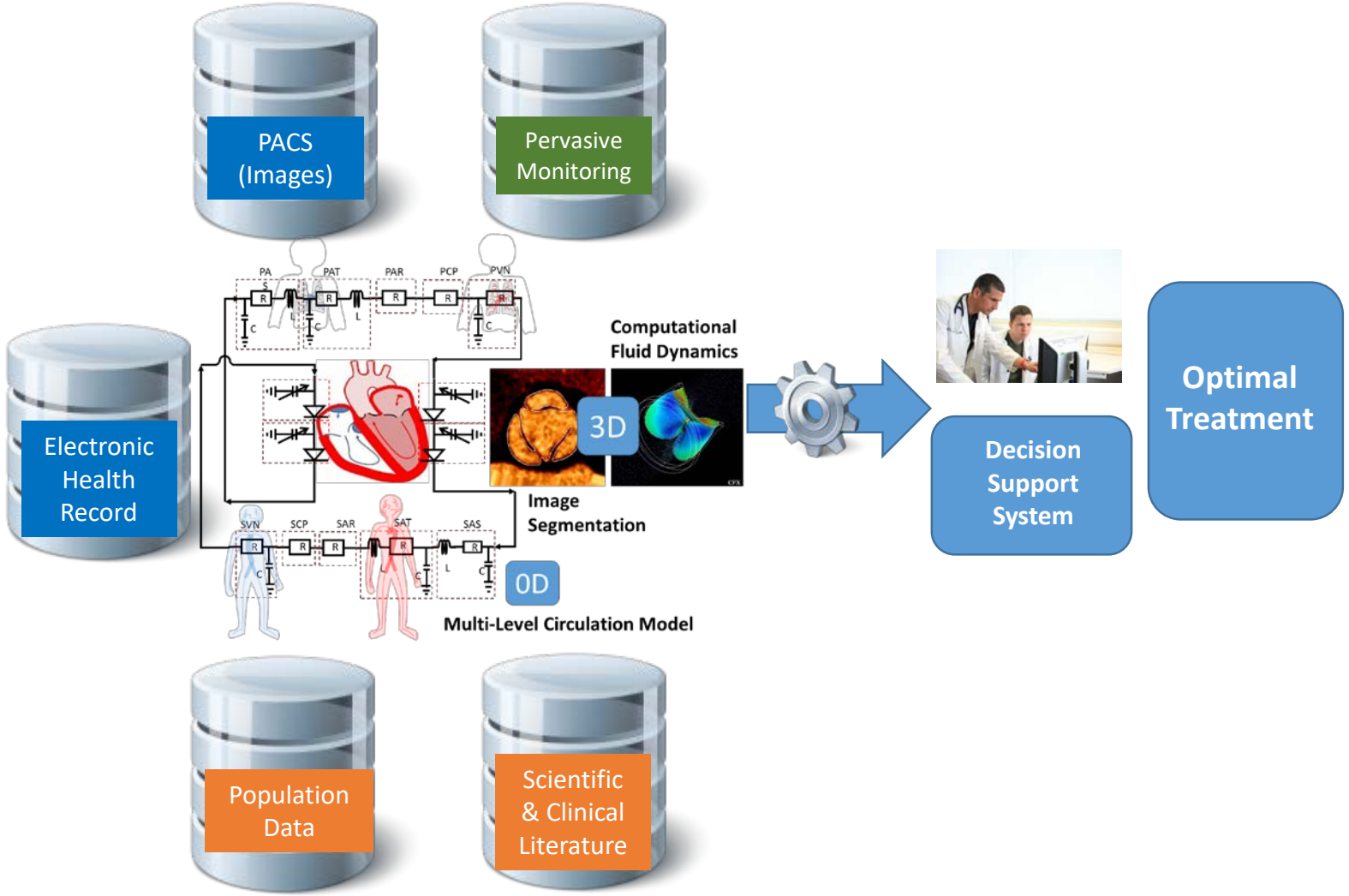

Modelling of heart valve disease

0D

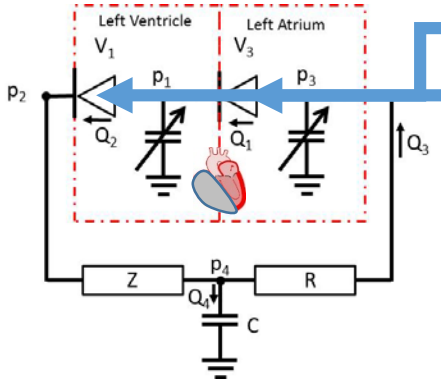

- To characterise system haemodynamics across physiological envelope

3D

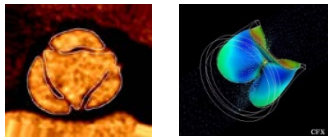

- To characterise individual valve pressure drop/flow relationship for use in simpler models
- To build modes for use in Reduced Order Models (ROM)

ROM

- To characterise system haemodynamics across physiological envelope
- To characterise valve pressure drop/flow relationship for use in simpler models

Coupled 3D/0D

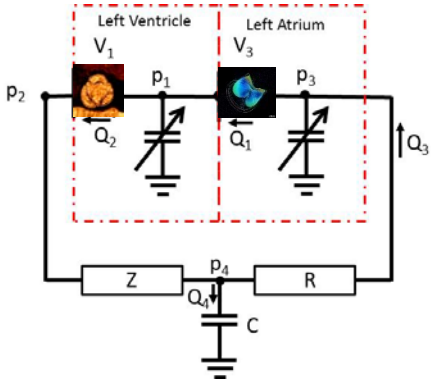

- To characterise system haemodynamics across physiological envelope (hours/days/weeks execution time)
- To build modes for Reduced Order Models (ROM)
- Sensitivity Studies

0D model of systemic circulation

- 0D model: based on a 23 parameter model published to CellML
  - Implemented in MATLAB
  - Solves discretised equations using Newton's method with adaptive time stepping
  - Offers a choice of different models for the heart valves
  - Can be operated through a standalone GUI or in batch mode also through the MEE
  - Solution time of one run under 10 seconds (depending on settings and input complexity)

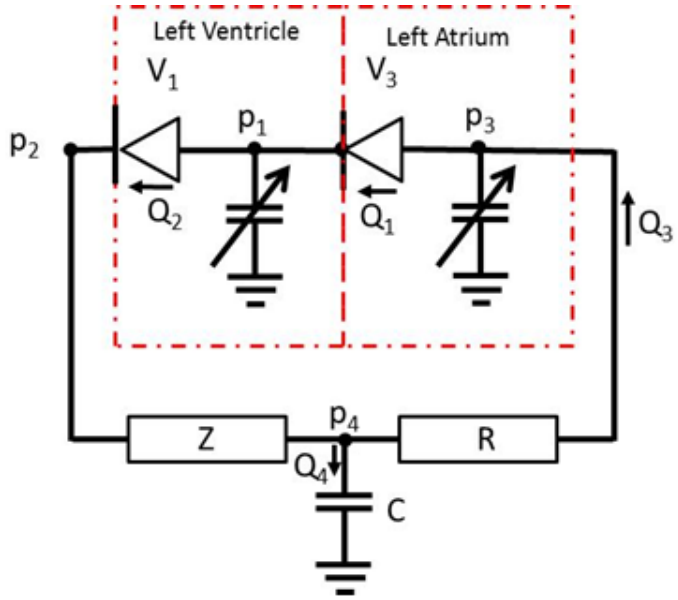

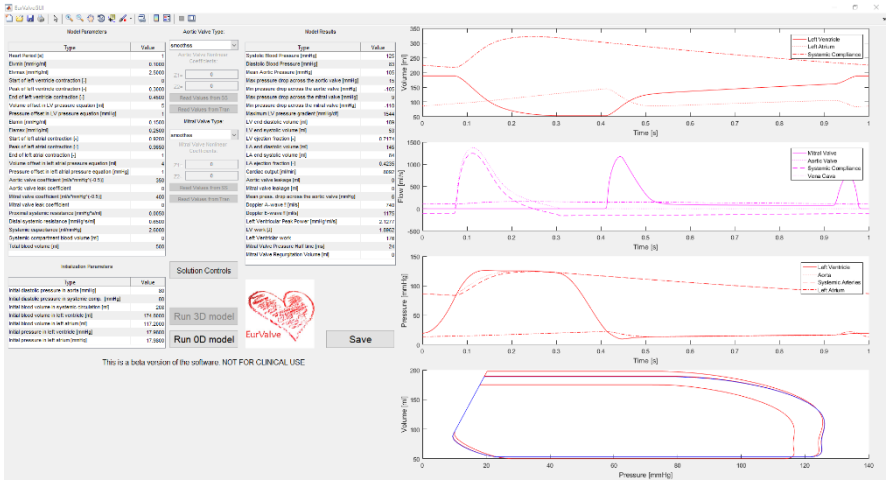

0D model of systemic circulation

- Model components:
  - Model of the heart
    - 2 chamber model
    - Each chamber is based on a variable elastance model
  - Systemic circulation
    - 3 element lumped parameter ZCR model
  - 2 valves
  - Interactions of the model components based on flow and pressure continuity equations

$$\frac{dV_1}{dt} = -Q_2 + Q_1$$

$$0 = p_1 - p_{1,0} - e_1(t) \cdot (V_1 - V_{1,0})$$

$$0 = Q_2 - Q_{ao}(p_1, p_2)$$

$$0 = ZQ_2 - p_2 + p_4$$

$$0 = RQ_3 - p_4 + p_3$$

$$p_4 = \frac{1}{C}(V_4 - SBV_u)$$

$$0 = Q_2 - Q_3 - Q_4$$

$$\frac{dV_3}{dt} = Q_3 - Q_1$$

$$0 = p_3 - p_{3,0} - e_3(t) \cdot (V_3 - V_{3,0})$$

$$0 = Q_1 - Q_{mit}(p_3, p_1)$$

$$\frac{dV_4}{dt} = Q_4$$

0D model of systemic circulation

- Valves:
  - Different valve models available:
    - Diode – lets flow one way through one way and blocks the other way (Bernoulli based resistance in the open configuration)
    - Smoothed Diode – co-sine smoothing between closed and open valve states
    - 3D model based – includes the pressure drop across the valve based on 3D flow simulations
    - Smoothed 3D model – similar to smoothed diode
    - Simplified ROM based – based on characterisation of flow through a 2 parameter geometry of a valve

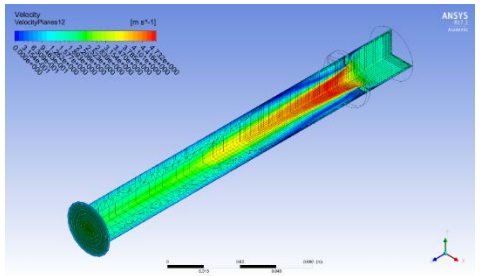

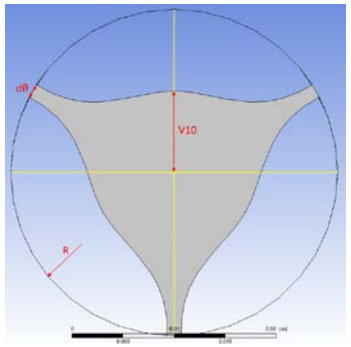

0D model of systemic circulation

- Coupling 0D and 3D models
  - 3D segmented geometries are processed to form a computational surface
    - automated cleaning of mesh structure, including elimination of unnecessary elements (ventricle)
  - Simulation mesh is created in ANSYS Fluent Meshing and run in ANSYS Fluent at 5 flow rates
  - The 3D model is linked to the 0D model via pressure-flow characterisation
    - Characterisation method works with both CFD and ROM based simulations

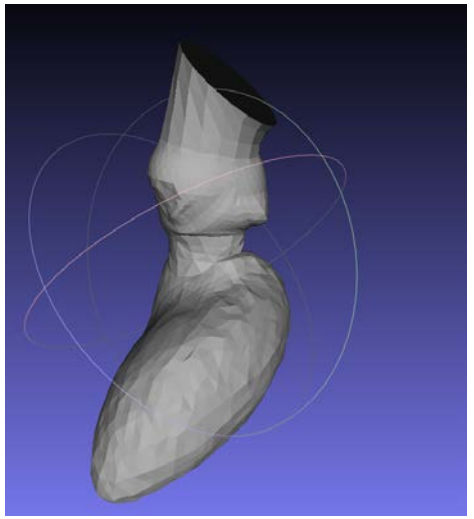

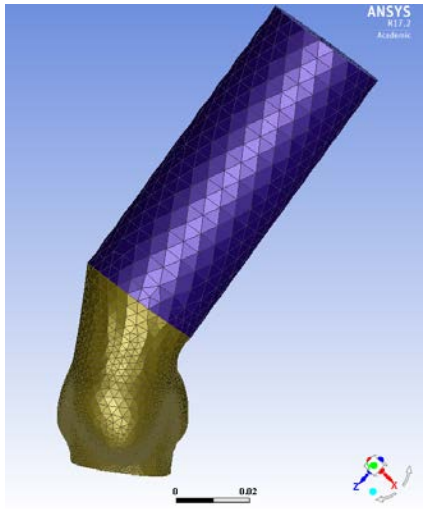

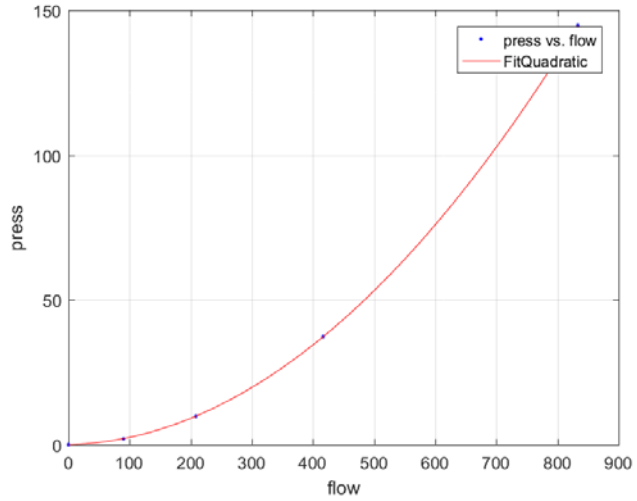

0D model of systemic circulation

- Results of the model:
  - 4 pressure waveforms
    - Left Ventricle, Aorta, Systemic Arteries, Left Atrium
  - 4 flow waveforms
    - Aortic valve, Towards the systemic compliance, Venus return, Mitral valve
  - 3 volume waveforms
    - Left ventricle, Systemic compliance, Left Atrium

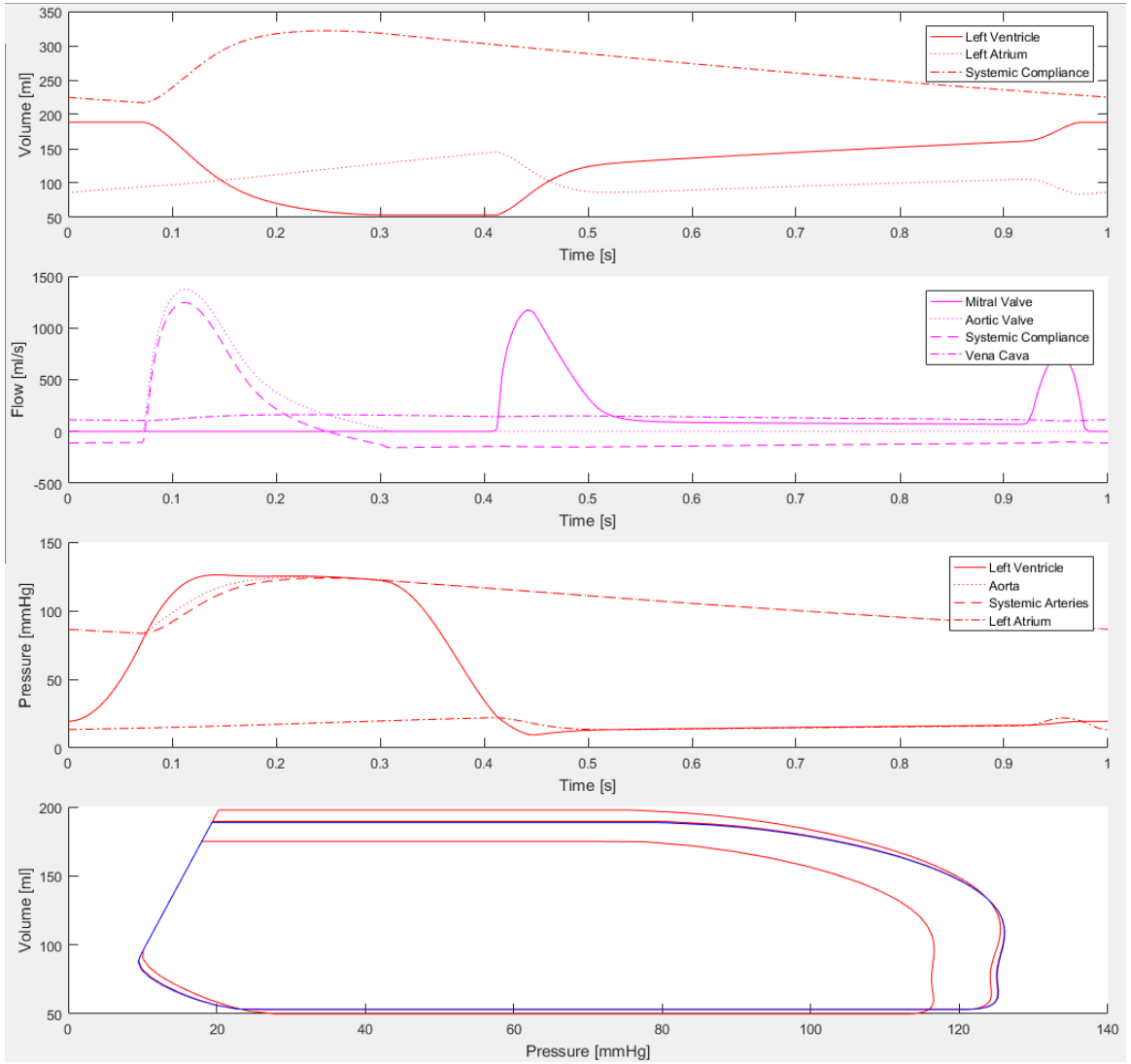

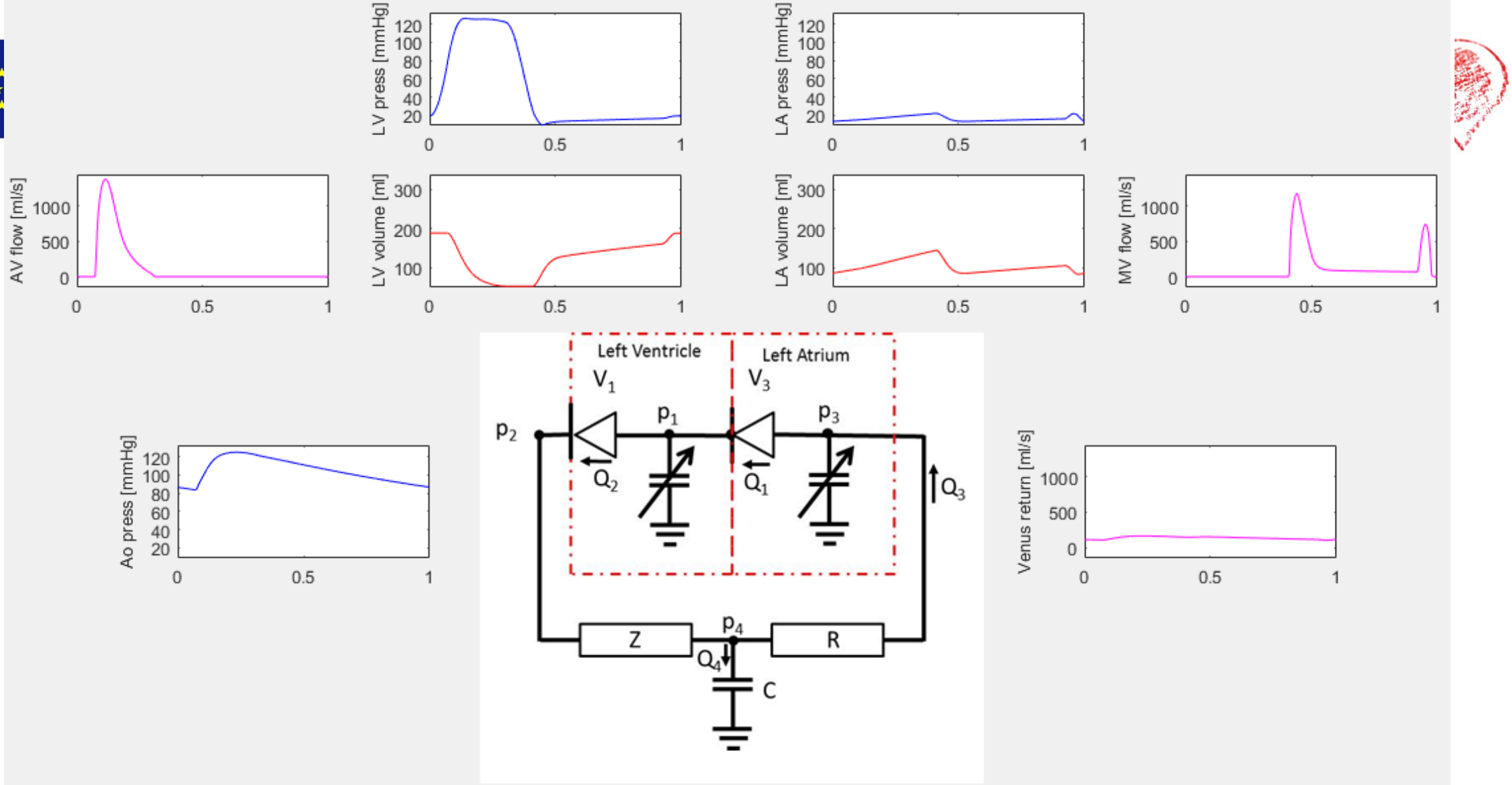
LV press [mmHg]
LA press [mmHg]
AV flow [ml/s]
LV volume [ml]
LA volume [ml]
MV flow [ml/s]
Left Ventricle
Left Atrium
V_1
V_3
p_1
p_2
p_3
p_4
Q_1
Q_2
Q_3
Q_4
Z
R
C
Ao press [mmHg]
Venus return [ml/s]
SC press [mmHg]
SC volume [ml]
SC retention [ml/s]

0D model of systemic circulation

- Output parameters
  - Waveforms are used to calculate 25 output parameters that can be measured:
    - Systolic, Diastolic and Mean Blood Pressure in the left ventricle
    - Max and min pressure drop across the mitral and aortic valves
    - LV and LA end diastolic and systolic volumes
    - LVEF, LAEF
    - Cardiac output
    - AV, MV leakage
    - Doppler A- and E- wave
    - MV pressure half time
    - MV and AB Regurgitation volume
  - or give unmeasurable information:
    - LV peak power, LV work

Personalisation of the model

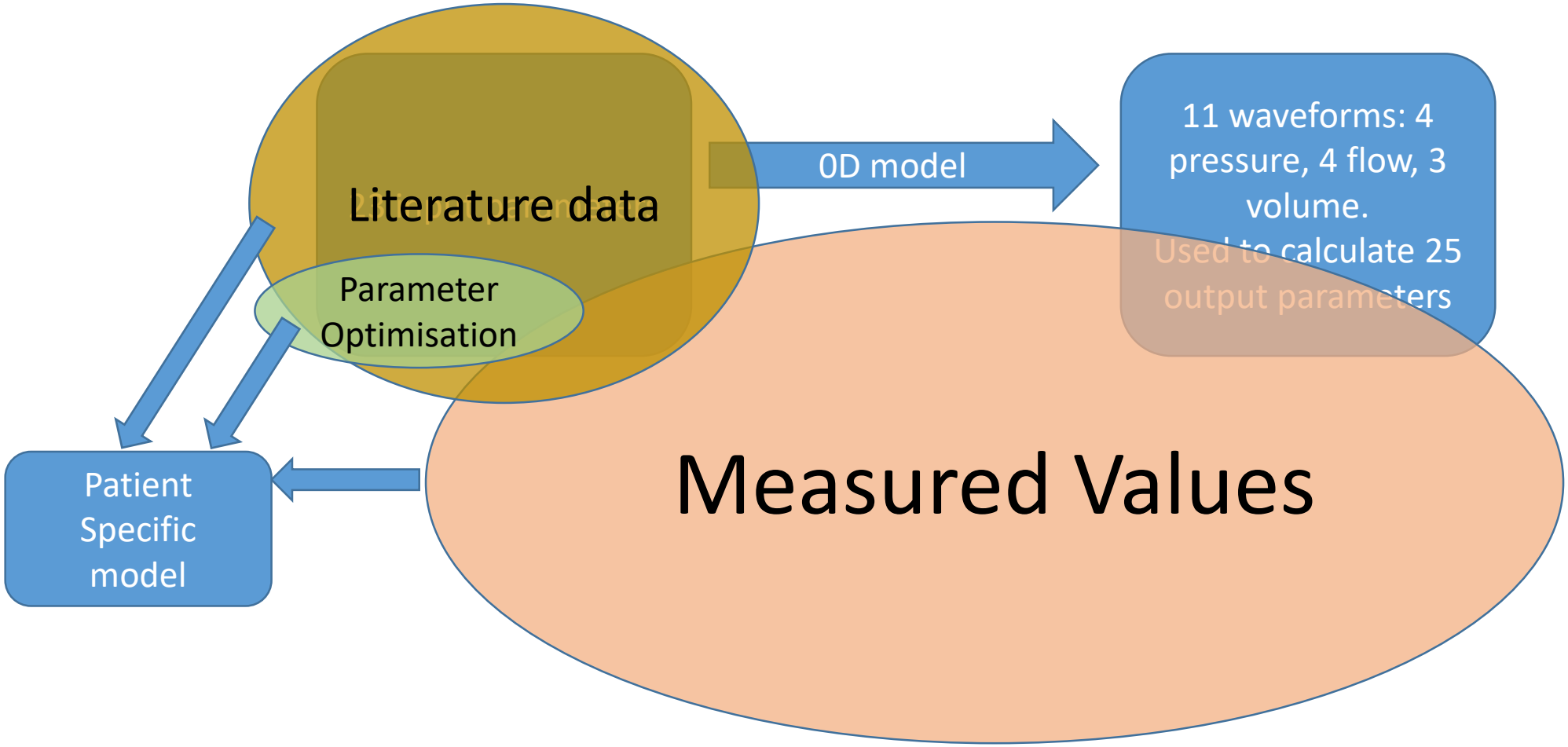

Personalisation of the model

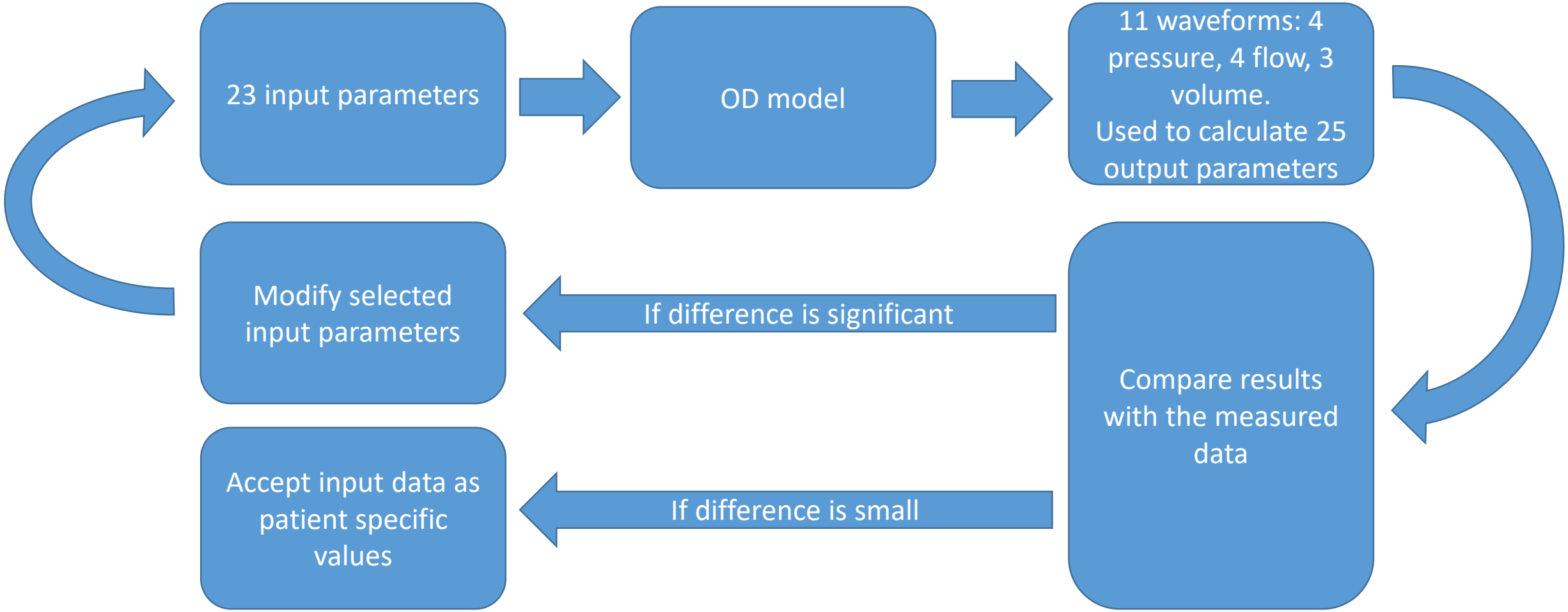

Personalisation of the model

- Parametric optimisation – using single value output parameters
  - Optimisation is based on a Genetic Algorithm coupled with Nelder-Mead simplex algorithm, from Matlab's optimisation toolbox
    - GA provides a good initial guess for the second algorithm
    - Nelder-Mead simplex algorithm finds the global minimum
  - Method can be used in case there is no time series data available

Method parameters:
- 4 inputs to tune
- 4 output measurements

GA parameters:
- Max. generations: 10
- Population in generation: 81
- Run in parallel

Nelder-Mead simplex algorithm:
- Uses GA result as input
- Max. tolerance 1e-6

Cost function
- L2 norm of weighted error of output estimation

Personalisation of the model

- Parameters for personalisation
  - Measurements used for the personalisation of the model:
    - Mean Blood Pressure (cuff measurement)
    - Diastolic Blood Pressure (cuff measurement)
    - LV systolic volume
    - LV diastolic volume
  - Tuned parameters:
    - LV maximal elastance
    - Capacitance
    - Distal Resistance
    - Stressed blood volume

Evaluation of model personalization

- Validation
  - 110 random ‘digital patients’ generated
  - Output parameters generated

Literature values with added noise with a normal distribution with a standard deviation of 25% and truncated at ±50% of each parameter value

If values were not physiological (MAP < DBP or LVSV>LVDV) than the ‘digital patient’ was excluded

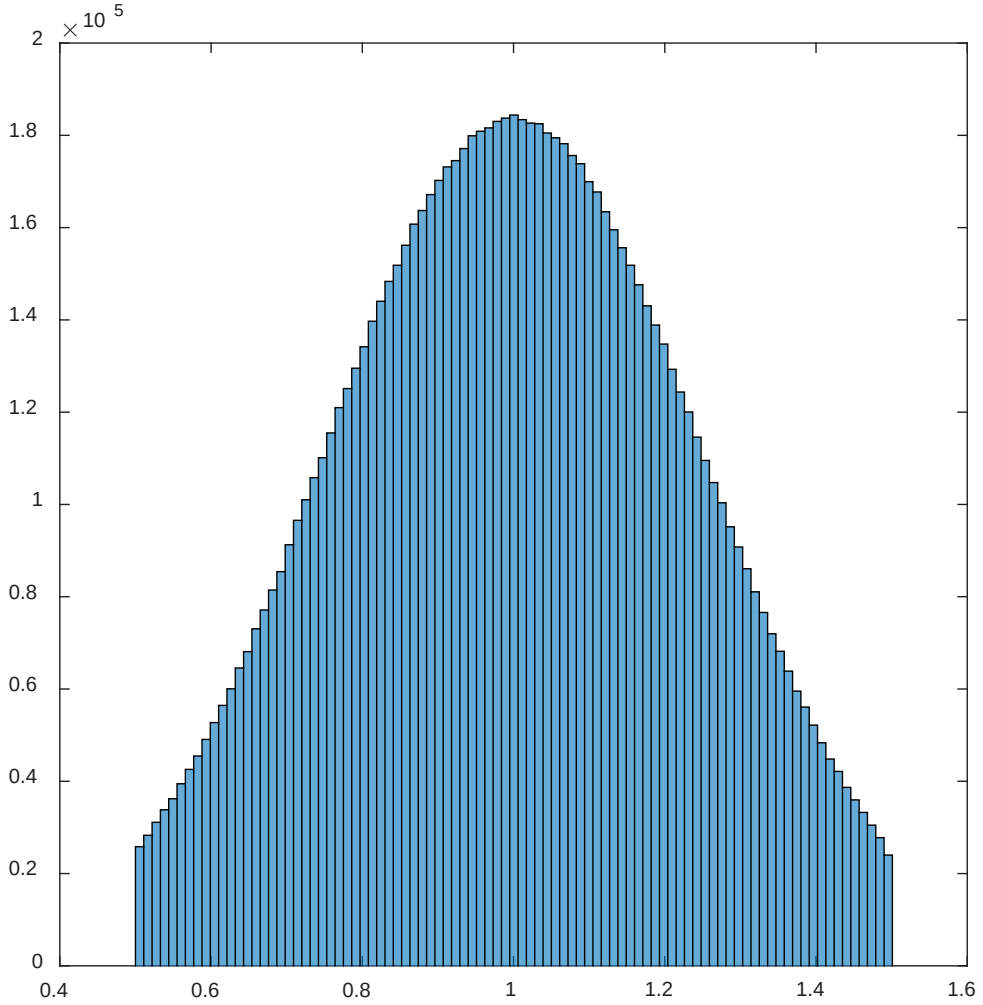

Evaluation of model personalization

- Validation results
  - Parameter optimisation run on all cases
    - 5 runs failed to converge the optimisation step
    - Failure due to small differences between generated parameters i.e. MAP-DBP<0.1mmHg
    - Other cases converged to cost function values of below 1e-6 without problems
  - Genetic Algorithm is based on random functions

    -> ending GA before convergence can lead to random results
  - Test to verify that this is not the case:
    - 10 randomly generated cases were run 20 times each
    - With current settings, the parameter optimisation always reached the same results

Evaluation of model personalization

- Conclusions
  - This very simple model can be personalised to reproduce representative temporal distributions of pressure and flow
  - Model can operate coupled to real stenosed 3D valve image segmentations
  - The process can be robustly carried out on larger scales with minimal human intervention
- Further work
  - Operate on real patient data
  - Compare results with other optimisation methods
  - Integrate full ROM of the valves

Thank you!

Krzysztof Czechowicz
e-mail: *k.czechowicz@sheffield.ac.uk*

This work is supported by the EU project EurValve *Personalised Decision Support for Heart Valve Disease* H2020 PHC-30-2015 689617. This research was supported in part by the PL-Grid infrastructure.